BIANCO NXT controls

Borepump Capacitor Box

814437 • BIA NXT PROTECTPLUS1-22CAP16UF
814438 • BIA NXT PROTECTPLUS1-22CAP20UF
814439 • BIA NXT PROTECTPLUS1-22CAP25UF
814440 • BIA NXT PROTECTPLUS1-22CAP30UF
814441 • BIA NXT PROTECTPLUS1-22CAP35UF
814442 • BIA NXT PROTECTPLUS1-22CAP40UF
814443 • BIA NXT PROTECTPLUS1-22CAP45UF
814444 • BIA NXT PROTECTPLUS1-22CAP50UF
814445 • BIA NXT PROTECTPLUS1-22CAP55UF
814446 • BIA NXT PROTECTPLUS1-22CAP60UF
814447 • BIA NXT PROTECTPLUS1-22CAP70UF



BIANCO NXT 2 YEAR WARRANTY

1. Introduction

Thanks for choosing the Bianco NXT PROTECTPLUS CAPACITOR as a starter box for your single-phase PSC (Permanent Split Capacitor) bore pump motor.

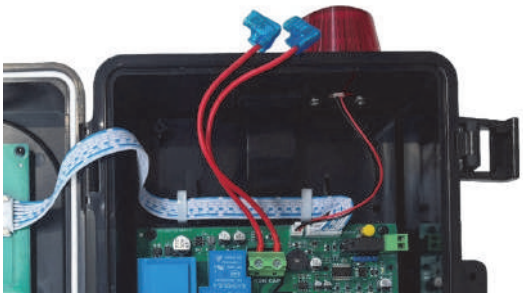

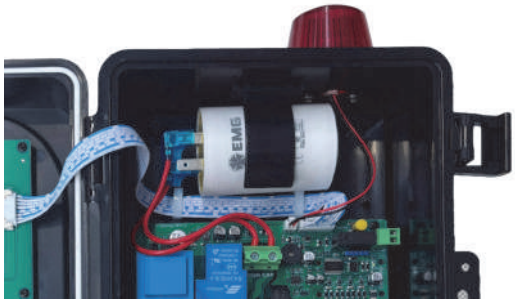

2. Contents

1. Introduction 2
2. Contents 2
3. Useful icons 3
4. Warnings 3
5. Pump Installation Check list 5
6. Controller Shortcuts 6
7. Display 7
8. Electrical Connections 8
9. Programming 9
10. Calibration 10
11. Program Parameters - iPROTECTPLUS 11
12. Low Yielding bores 13
13. Quick guide: Sensorless Time control 14
14. Quick guide: Transfer – source/destination control 15
15. Quick guide: Pressure Boosting 16
16. Quick guide: Pressure Boosting, dry contact output 17
17. Quick guide: Flow Controller Interface 17
18. Cable Jointing 18
19. Best practice Installer Guide supporting notes 19
20. Initial Starting Procedure 20
21. Accessories 22
22. Trouble Shooting Guide 23
23. Warranties – Terms and Conditions 24

3. Useful icons

	Warning - Electrical safety
	Warning – Potential consequences of use outside of intended application(s). Includes environmental condition warnings.
	Mandatory warning
	Warning to disconnect power
	Read carefully

4. Warnings

	Read the manual carefully before starting.
	Prior to starting installation or any maintenance the pump must be disconnected from the power supply and pressure relieved from the system including pump and associated pipework.
	Any changes or modification to the wiring must be carried out by suitably qualified personnel.
	A qualified electrician should correctly size and install circuit breakers to protect the power supply. The fitment of additional surge protection is recommended.
	This appliance is not intended for use by persons (including children) with reduced physical, sensory or mental capabilities, or lack of experience and knowledge, unless they have been given supervision or instruction concerning use of the appliance by a person responsible for their safety. Children should be supervised to ensure that they do not play with the appliance.
	Ensure that the installation will comply with all applicable local regulations.

‘Best Practice’ Installation Guide

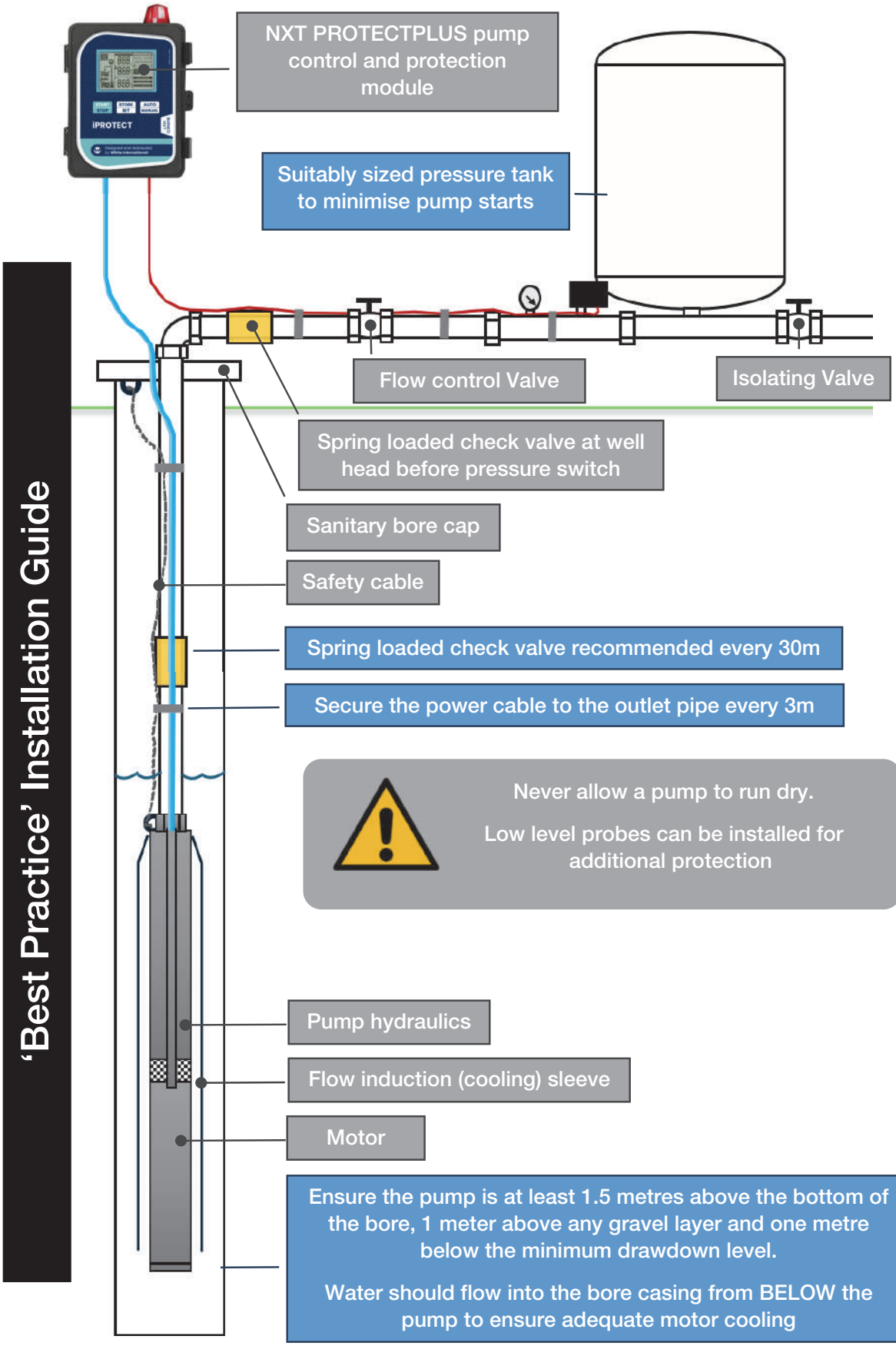

5. Pump Installation Check list

Inspect the pump, motor and controller for shipping damage



- Ensure that the motor lead assembly is undamaged,
- Check the pump and motor shaft turn freely.
- Verify that pump kW requirement and motor power match.

Electrical checklist



- Isolate the main power before any electrical work.
- All high voltage wiring should only be done by qualified technicians.

Assemble the motor to the hydraulic assembly.

- Before assembly, check that pump and motor mounting faces are free from dirt, debris or contamination.
- Assemble the pump and motor vertically to prevent stress on pump bracket and shaft. Once the mounting faces are in contact tighten assembly nuts evenly.
- Assemble the pump lead guard over the motor ends taking are not to cut or pinch lead wires during installation.

General installation checklist

- Make all underwater and underground splices with waterproof splice connections.
- Support the power cable to the delivery pipe every 3 meters with straps or tape strong enough to prevent sagging.
- Use padding between cable and any metal straps.
- Hold the pump at the discharge head when installing threaded pipe or fittings.
- All plumbing connections must be tight and sealed with thread tape or sealant.
- The delivery pipe pressure rating must be higher than the pump shut off pressure.
- A pressure relief valve is recommended to prevent exceeding pressure switch, pressure gauge or pressure tank ratings.
- Locate the pressure switch within 1 meter of the pressure tank to prevent switch chatter.
- Set the pump 1.5 meters above well bottom to avoid sediment and debris.

Commissioning the pump

- Turn the main circuit main breaker and/or isolator on.
- Restrict the flow with a valve, 1/3 open, before starting pump for the first time.
- Divert the water supply so that dirty water does not enter the tank or water supply.
- Check and note the amps and pump delivery. If normal, continue to run the pump until delivery is clear.
- Verify that starting, running and stopping cause no significant vibration or hydraulic shocks.
- After at least 15 minutes running time, verify that pump output, electrical input, pumping level, and other characteristics are stable and as specified.
- Calibrate the controller

6. Controller Shortcuts

The ProtectPlus display provides information about the controller logic mode and operating state.
In normal operation, the display will show the incoming voltage, and in most logic modes, the current draw.

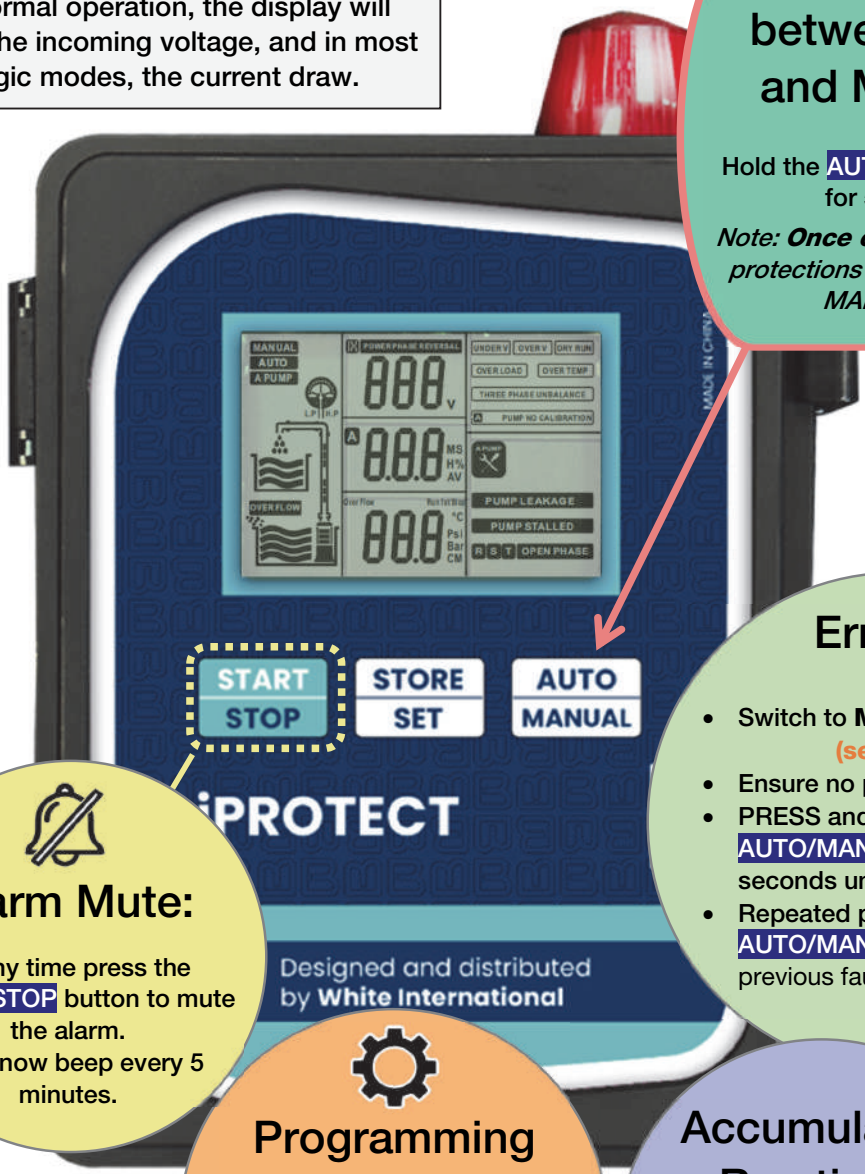

Switching between AUTO and MANUAL:

Hold the AUTO/MANUAL button for 5 seconds.

*Note: **Once calibrated,** all pump protections are valid in while in MANUAL state*

Error log:

- Switch to **MANUAL** mode (see above)
- Ensure no pumps are running.
- PRESS and HOLD the AUTO/MANUAL button, for 5 seconds until the unit beeps.
- Repeated presses of AUTO/MANUAL cycles through previous faults (Max 5)

Alarm Mute:

At any time press the START/STOP button to mute the alarm.
It will now beep every 5 minutes.

Programming menu

In **MANUAL** state, with no pump running, press the STORE/SET button for 5 sec.

Page 12

Accumulated Run time:

- Controller in **MANUAL** state.
- Press and hold STORE/SET and START/STOP together.

Setting Parameter 019 (Button Lock) to **on** (active) is STRONGLY RECOMMENDED

7. Display

The NXT PROTECTPLUS display provides a real time indication of the operational mode and the current state of the controller, including real-time voltage/current and any error messages.

Only the icons relevant to the selected operational mode will display.

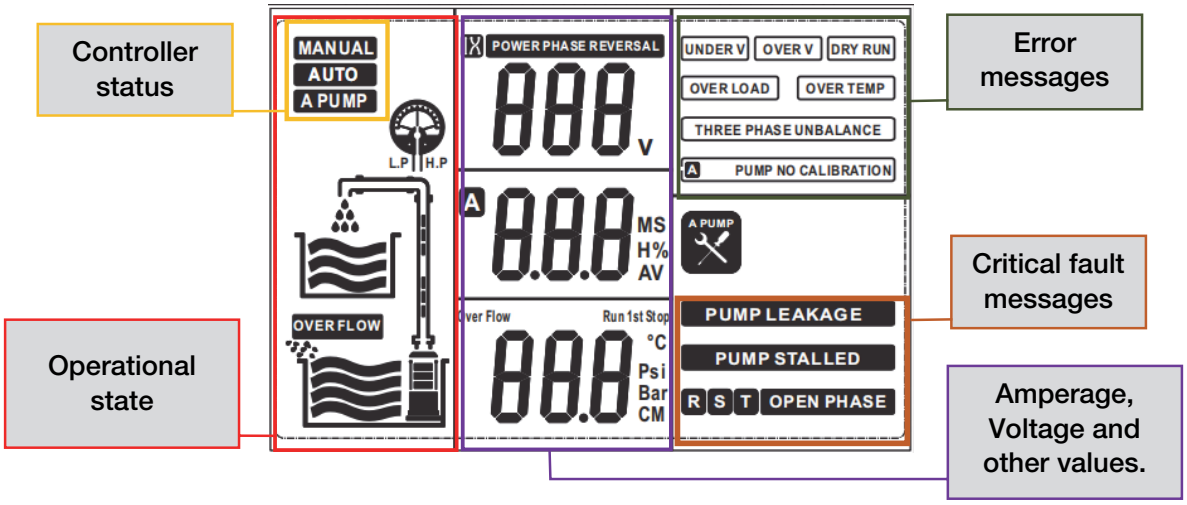

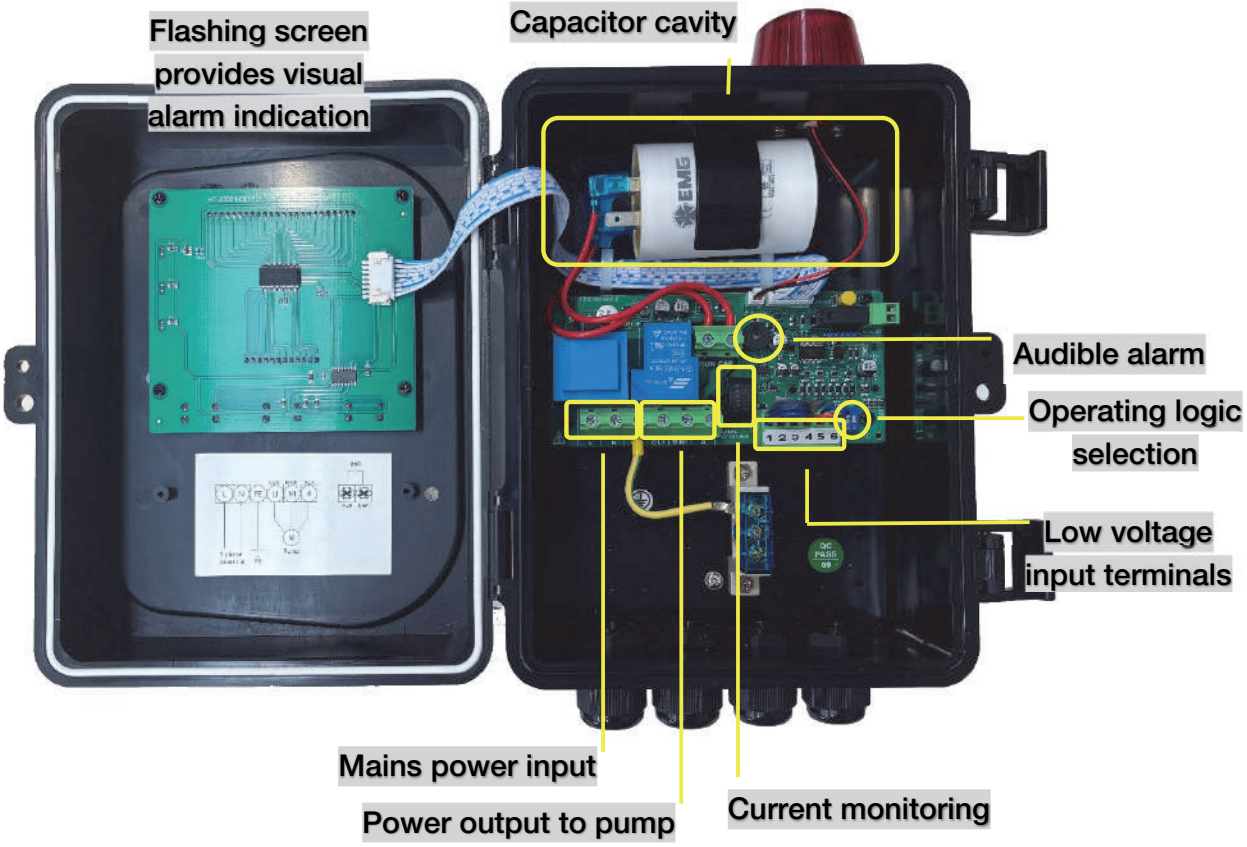

8. Electrical Connections

Always use an electrical outlet that is protected by Residual Current Device (RCD) Safety Switch with a trip current of 30mA or less. A Safety switch is required by Australian/New Zealand Standard AU/NZS 60335.1-2011.

All high voltage wiring must be connected by a suitably qualified technician.

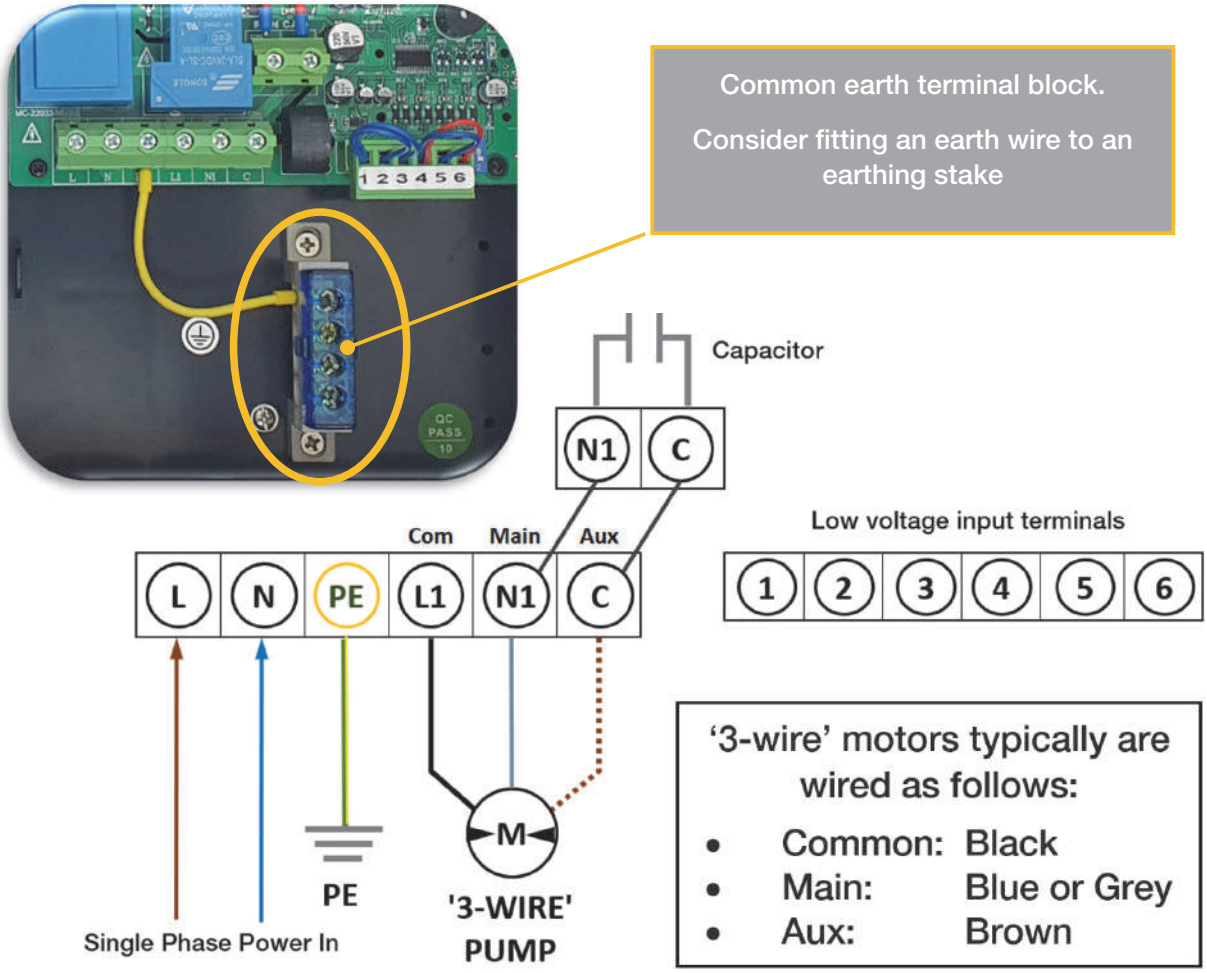

The use of cable smaller than that specified below may cause premature motor failure and will void the warranty. Larger sized cables may be used.

The use of old drop cable or white flat is not recommended. Use water-proof cable only, rated for immersion to 100 m.

		Maximum power cable length					
Motor Power >>>		**0.37**	**0.55**	**0.75**	**1.1**	**1.5**	**2.2**
Cable Cross-section mm2	**1.5mm2**	*90*	*65*	*45*	*35*	*25*	*20*
	2.5mm2	*170*	*120*	*90*	*65*	*50*	*35*
	4.0mm2	*275*	*195*	*145*	*105*	*85*	*55*
	6.0mm2	*417*	*295*	*215*	*155*	*125*	*85*

9. Programming

Controller operation is managed using the buttons on the front cover and a sequence of short, long and combination button presses.

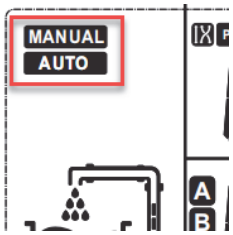

1. Press AUTO MANUAL to change the unit into MANUAL mode



2. Press and hold STORE SET for 5 seconds to enter the parameter menu

Icons will appear on the screen which serve as a 'sanity-check' confirming the active parameter.

The middle of the screen will display the programmed value and units of measure.

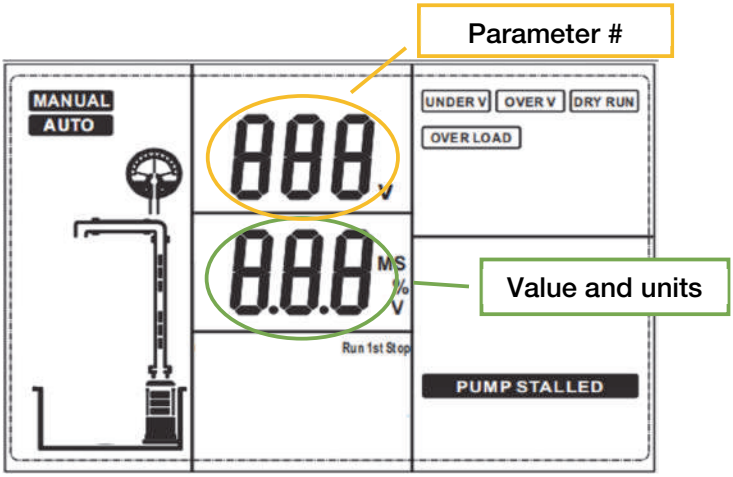

- Press the START | STOP button to increase a value.
- Press the AUTO | MANUAL button to decrease a value.
- To store the value and advance to the next parameter press the STORE | SET button.

3. Press and hold STORE SET for 5 seconds to exit the parameter menu

10. Calibration

When the controller is first powered up, it will beep and the screen will flash displaying ALL icons. After a second beep, the screen will display two numbers.

- The top line is the operating logic expressed as a binary number, representing the dip switch position. (1 = UP, 0 = DOWN).

- The second line is the unit software.

The current Software version is 2.0.0

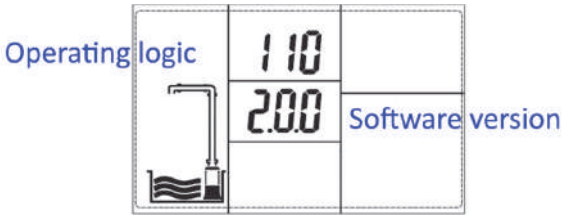

Auto calibration of pump operating current

The pump must be able to pump water to enable correct calibration. Calibrated without water, overload and pump stalled errors may occur later.

Auto calibration will populate parameter #06 as 80%, #07 as 135% and #08 as 170%.

- In manual mode, short press START/STOP.
- Allow the pump to run and the current draw to stabilise.
- Once you are satisfied the pump is in its 'normal' operating range a short press of the STORE/SET button will cause the controller to chirp indicating success.

The Pump operating kilowatt value (Voltage x Amperage) can be programmed manually into Parameter #01: Underload #06, Overload #07 and Pump Stalled Values #08 will automatically update.

The pump will run in AUTO mode without a calibration but offers NO PROTECTION

Always perform a fresh calibration after installing a new pump, or when reinstalling an existing pump following maintenance.

Pump current draw MUST be greater than 1 amp for successful Auto Calibration.

See Pg 22 for suggestions re calibrating small motors (less the 0.75kW)

Clearing a calibration

With the pump stopped and the controller in MANUAL mode, PRESS and HOLD the START/STOP button for 30 seconds.

The controller will restart and the screen will display a flashing PUMP NO CALIBRATION message.

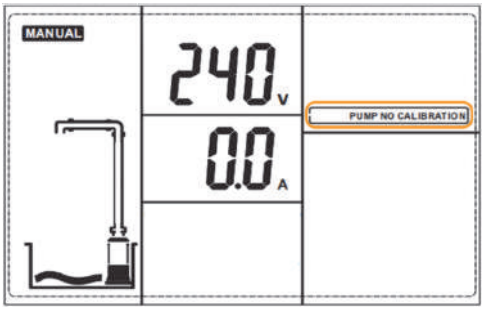

Full factory reset

- Turn off power to the control panel,
- Press and hold START/STOP as the power is turned on
- When the display shows 099, release the START/STOP button.

11. Program Parameters -iPROTECTPLUS

These parameters relate to the PROTECTPLUS V2.0.0



ITEM	DEFAULT	OPERATION
001	**3.5 kW**	**Rated/Set Motor Power:** range 0 – 3.5kW
002	**6 sec**	**Dry run trip time:** range OFF – 60 sec
003	**30 min**	**Dry run protection recovery time:** range OFF – 254 min
004	**5 min**	**Overcurrent recovery time:** range OFF – 60 min
005	**5 min**	**Under / Over voltage recovery time:** range OFF – 60 min
006	**80%**	**Dry-run (under-load) trip amperage:** range OFF – 95%
007	**135%**	**Over load trip amperage:** range OFF – 170%
008	**170%**	**Pump stalled trip amperage:** range OFF – 240%
Parameters 006, 007 and 008 are a percentage of (Voltage / kW) value		
009	**204V**	**Under voltage trip:** range 0 – 295V
010	**276V**	**Over voltage trip:** range 0 – 295V
011	**OFF**	**Timer control (auto mode)** Options: OFF / On
012	**5 min**	**Pump run timer:** range 0 – 254 min
013	**5 min**	**Pump Stop timer:** range 0 – 254 min
014	**OFF**	**Manual run stop delay** range OFF– 254 min
015	**5 min**	**LCD backlight timeout:** range OFF – 254 min
016	**OFF**	**Maximum run time in Boosting mode:** range OFF – 254 min
017	**96hr**	**Anti-seize:** range OFF – 254 hr
018	**OFF**	**Probe/ Float de-bounce filter time:** range OFF – 25.4 min
019	**OFF**	**Button Lock:** Options: OFF / ON Press STORE | SET and AUTO | MANUAL buttons together to for 5 sec to unlock

Program Parameters – Previous model

This table has been included in the event that you need to tune the previous iProtect model V1.0.0 (without an alarm light)



ITEM	DEFAULT	OPERATION
001	**0.0 A**	**Dry run protection trip amperage** Auto config = 70% of calibration value
002	**26 A**	**Over load protection trip amperage:** Auto config to 140% of calibration value
003	**33.1 A**	**Pump stalled trip amperage:** Auto config 170% of calibration value
The user may manually tune parameters 001, 002 and 003 to alter the auto configuration values		
004	**352V**	**Under voltage trip voltage**
005	**476V**	**Over voltage trip voltage**
006	**6 sec**	**Dry run protection trip response time:** range 0 – 254 sec
007	**30 min**	**Dry run protection recovery time:** range 0 – 254 min
008	**00**	**Timer control (auto mode)** 00 = inactive 01 = active *Once activated, parameter 008 becomes invisible*
009	**5 min**	**Pump run timer:** range 0 – 254 min
010	**5 min**	**Pump Stop timer:** range 0 – 254 min
011	**0 min**	**Pump stop time (manual mode):** range 0 – 254 min
012	**5 min**	**LCD backlight timeout:** range 0 – 254 min
013	**00 min**	**Maximum run time alarm in Boosting mode:** range 1 – 254 min
014	**00**	**Button Lock – set to 01 to activate** Manual/Auto and Store buttons to unlock
015	**~**	**Pump start delay time:** range 0 – 254 sec
016	**~**	**Pump stop delay time:** range 0 – 254 sec

It the controller in front of you is an iCON iProtect PN 802697, contact White International



12. Low Yielding bores

In some situations, the output from the pump is greater than the yield of the well. Should the water level fall to the suction screen, a mixture of air and water will enter the pump causing the pump output flow to cease because the pump cannot generate pressure with insufficient water.



When this occurs, the column of water already in the discharge pipe can hold the check valve closed and an airlock may develop inside the pump.

In this situation, the pump has neither adequate lubrication nor proper cooling for the motor and damage can result if power is not cut off quickly.

1 First, ensure that the pump size is properly sized. A smaller pump may avoid over pumping the well.

2 The flow control valve should be set to ensure the pump flow is near the middle of its hydraulic curve

3 The NXT PROTECTPLUS controller has a number of parameters which can protect and control the pump in this situation.

In either of the Pressure Boosting modes, or in Transfer mode, the pump can be controlled by switched inputs (floats, pressure switches) or capacitance probes.

Sensorless time control mode uses pumping cycle time.

Application example: Pumping from a low yielding bore with a pressure switch as the primary control.

- The pump starts on the pressure switch input but through experience, the customer knows it can only run for 10 mins before the well level draws down excessively. It takes 20mins for the water level to recover.
- Set parameter 012 to 10 minutes, and parameter 013 to 20 minutes.
- Set parameter 006 to Off
- Activated by the pressure switch the pump will run for 10mins, turn off for 20mins then run again for 10mins etc.
- If the destination tank fills closing the ballcock the pressure switch will turn the pump off irrespective of the 009 run-time

Full details of sensorless time control mode is in the next section

13. Quick guide: Sensorless Time control



Set the dip switches on the main PCB before applying power

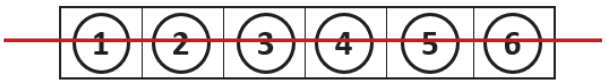

011	**OFF**	**Timer control (auto mode)** Options: Off / on
012	**5 min**	**Pump run timer:** range 0 – 254 min In Auto mode the pump will run for the time set then stop and consider parameter 013 value
013	**5 min**	**Pump Stop timer:** range 0 – 254 min In Auto mode, having turned off at the parameter 012 value, the pump will remain off for the parameter 013 value then restart running for parameter 012 value etc

In this mode, the controller does not require any inputs, it operates on timers

Set to Auto, the controller will operate the pump will run for the period programmed at parameter 012. The screen will display the remaining time period *Run1st XXm*

At the end of the run period, the controller will stop the pump for the period programmed at parameter 013. The screen will display the remaining time period *Stop XXm*

Where there are additional controls connected directly to the pump (float or pressure switch) and they create a pump no-run state, the controller will interpret this as an underload (Dry Run) condition. To prevent the controller entering a dry-run cycle, set parameter 006 to Off.

If the dry-run protect is left active, the controller will continue to cycle its Run / Stop timing sequence but pump operation will not resume until the value entered at parameter 003 (Dry run protection recovery time) has expired.

In the case of a critical alarm, the audible and visual alarm will activate and the dry contact will close.

I. First ensure the pump calibration setting is correct (Parameter 001)
II. Activate the timer control Parameter 011 Set to 1 = On
III. Set Parameter 012 – Run time (pumping) duration
IV. Set Parameter 013 – Stop time (recharge) duration

14. Quick guide: Transfer – source/destination control



Set the dip switches on the main PCB before applying power

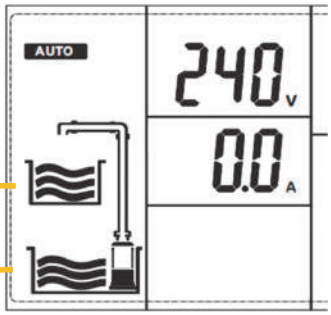

Request-to-run on destination circuit #4, #5 & #6

Permission-to-run on source circuit #1, #2 & #3

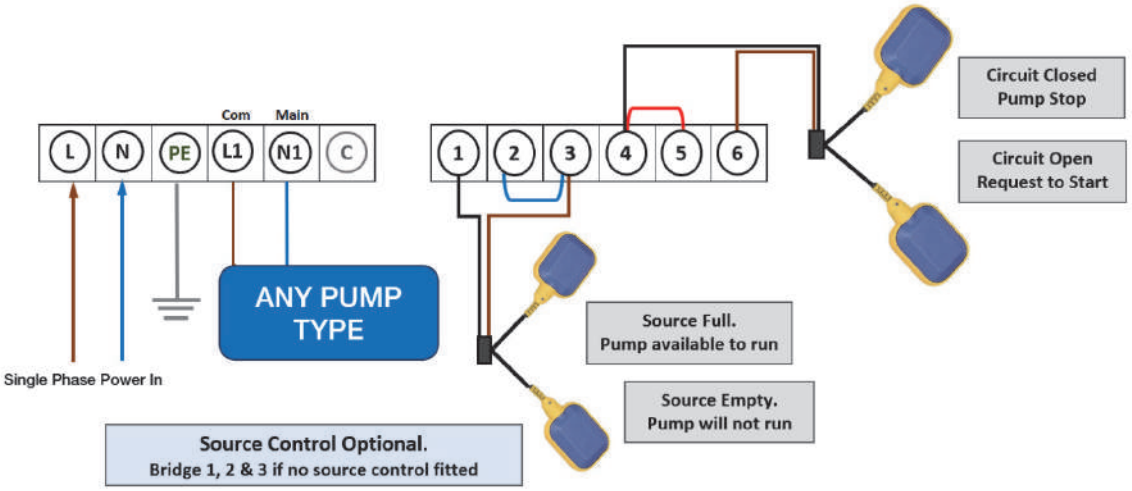

The controller is 'agnostic' as to what provides the signal – be it float switches, probes or a pressure switch.

When the destination tank icon shows empty i.e. no wavy lines, this indicates the 'request-to-run' circuit (#4 & #5, #6) is open-circuit.

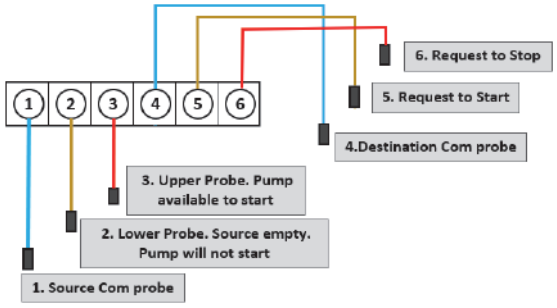

The controller looks to the 'permission-to-run' circuit (#1 & #2, #3) and if this is in a closed-circuit state i.e. bottom tank has 3 wavy lines, the controller will activate the pump.

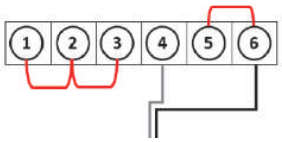

Inputs #1 & #2, #3 can be bridged (closed) and the pump controlled solely by inputs #4 & #5, #6.

In situations where the destination is a significant distance from the source it is possible to control the pump by fitting a normally-open (reverse acting) pressure switch to the delivery line. Connect the switch across #4 & #6. Bridge #5 and #6

Alternatively use a remote wireless sensor to trigger a switched input connected to #4 & #6.

15. Quick guide: Pressure Boosting

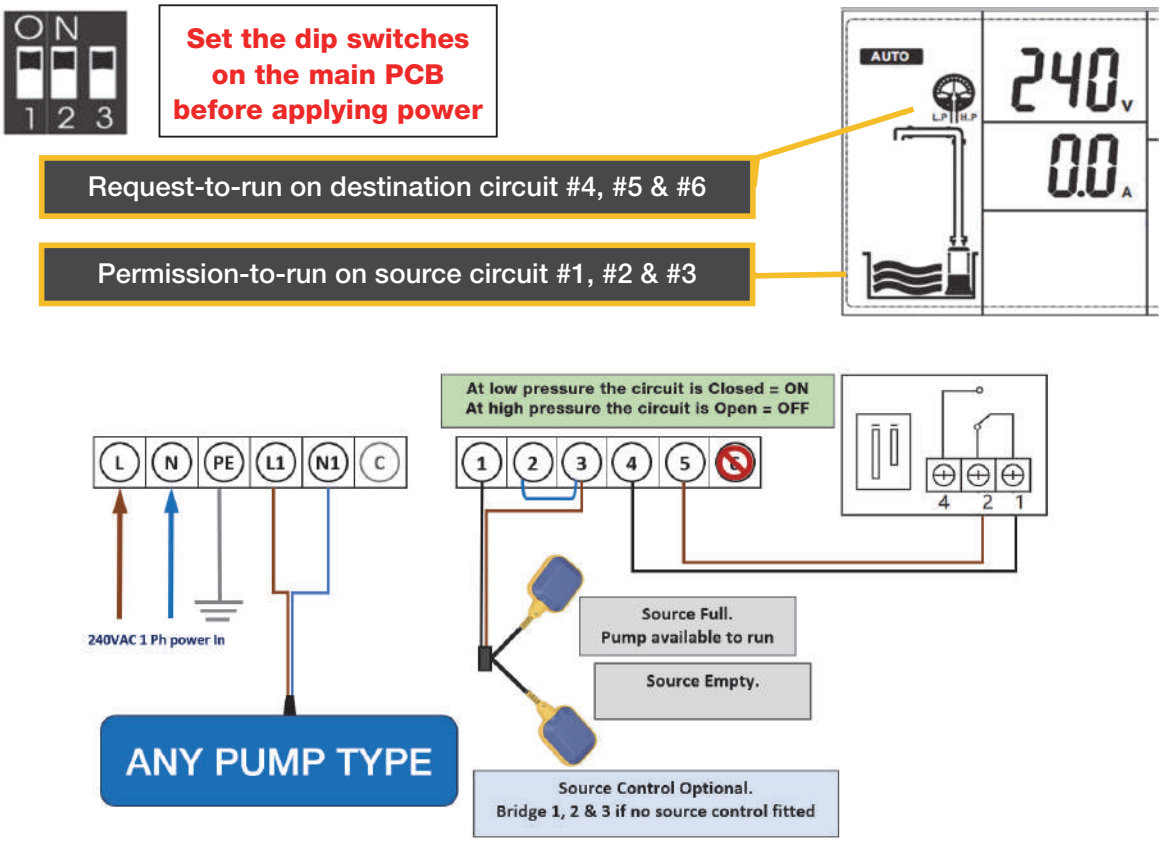

When the HP icon displays, this indicates the request-to-run circuit (#4 & #5, #6) is in a closed-circuit state and the pump will not operate.

When the LP icon displays, this indicates the request-to-run circuit (#4 & #5, #6) is open-circuit and there is a desire to pump.

The controller then looks to the permission-to-run circuit (#1 & #2, #3) and if this is in a closed-circuit state i.e. bottom tank has 3 wavy lines, the controller will activate the pump.

The controller does not and cannot read pressure.
The HP and LP icons simply indicate the state of the request-to-run circuit.

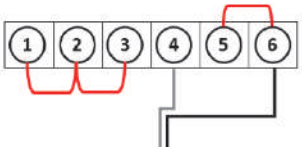

Inputs #1 & #2, #3 can be bridged (closed) and the pump controlled solely by inputs #4 & #5, #6.

Parameter 016 allows for a maximum pump run time when in pressure boosting mode as additional protection in the event of abnormal running.

016	**OFF**	**Maximum run time in Boosting mode:** range OFF – 254 min

16. Quick guide: Pressure Boosting, dry contact output



Set the dip switches on the main PCB before applying power

The operating logic in this mode is identical to the 'standard' pressure boosting mode on the previous page

1. When the HP icon displays, this indicates the request-to-run circuit (#4 & #5, #6) is in a closed-circuit state and the pump will not operate. In this state, the dry-contact is open-circuit
2. When the LP icon displays, this indicates the request-to-run circuit (#4 & #5, #6) is open-circuit, 'requesting' operation
3. The controller then looks to the 'permission-to-run circuit' (#1 & #2, #3) and if this is in a closed-circuit state i.e. bottom tank has 3 wavy lines, the controller will activate the pump. While in a 'permission to run' state = TRUE, the dry contact is open circuit. in a 'permission to run' state = FALSE, the dry contact is closed circuit.

A possible application for this is as a changeover from stored water to a pressurised supply.
When the pump is in a 'no-run' state i.e. no stored source water, the output to the solenoid operates to switch to allow an alternative pressurised water supply to feed the system.

17. Quick guide: Flow Controller Interface



Set the dip switches on the main PCB before applying power

1. Connect power to the controller
2. Connect the pressure controller output to the iPROTECTPLUS input.
3. Connect the iPROTECTPLUS output to the pump

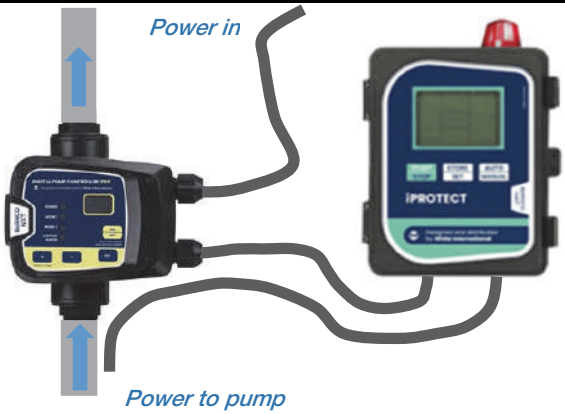

Set to this mode, the iPROTECTPLUS can be used in series with any Pressure Controller. The press-control manages the stop/start function of the pump.

The iPROTECTPLUS displays voltage and amperage (when running) but provides NO OTHER PROTECTION or control while in this mode.

When pressure falls to the start value of the pressure controller, power is supplied to the iPROTECTPLUS. The startup cycle of the unit is approximately 2 seconds before power is delivered to the pump motor. The alarm light will flash once when power is applied

This mode is for when the iPROTECTPLUS serves as the capacitor box (i.e. 3-wire single phase bore pumps) for a pump operated by a separate controller.

18. Cable Jointing

Jointing kit contents:

4 x Item Crimp Connectors (BP025)
4 x Item 10mm x 60mm HEAT SHRINK TUBE with RESIN
1 x Item 25mm x 305mm HEAT SHRINK TUBE with RESIN

To ensure a properly sealed joint, a Heat Gun capable of ≥ 275°C is required to shrink the insulation sleeving (items 2 and 3).

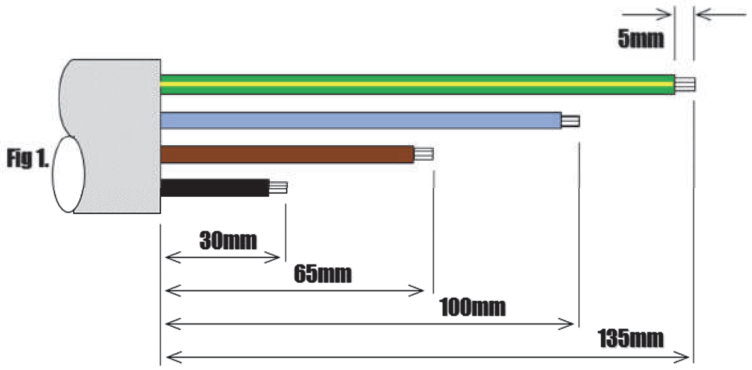

1. Remove 100mm of outer insulation from each cable to be joined, taking care not to damage secondary insulation.
2. Reduce the three wires of each cable to the dimensions shown in Fig.1, ensuring that the wire colours align as Fig.2.

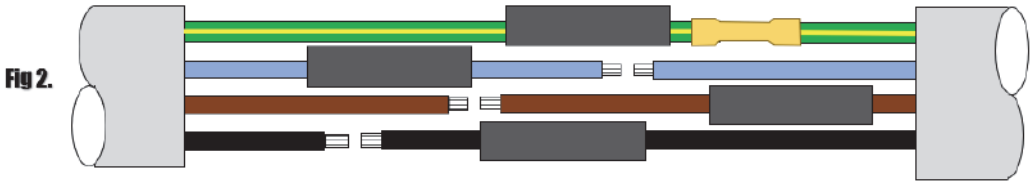

3. Slip item (3) over one end of the cable and item (2) over each of the three wires before using item (1) Crimp Connector to join wires as shown in Fig.2. Complete all crimps and locate item (2) over the completed crimps before commencing to heat shrink the individual connections.

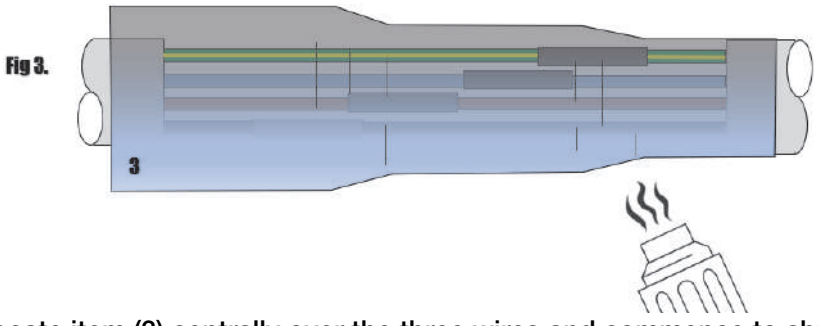

4. Locate item (3) centrally over the three wires and commence to shrink from one end as shown in Fig.3.
When sleeving is shrunk to its maximum, the cable join is complete.

19. Best practice Installer Guide supporting notes

1. Damage to pump or motor caused by abrasive or corrosive water is not covered under warranty. To guard against installing a pump in aggressive water, it is suggested that an analysis of the bore water be submitted to an accredited laboratory prior to installation to ensure pump suitability.

2. The bore should be clean before installation. The submersible pump must not be used to bail a new bore. Warranty does not cover failure or wear due to abrasives in the water.

3. Be sure voltage and frequency as shown on the nameplate of the motor are the same as the voltage and frequency on the line to which the motor is to be connected.

4. Never allow a pump to run dry, against a closed discharge or full open discharge. Refer to the pump curves which provide minimum and maximum flow conditions.

5. The check valve built into the pump should not be relied on as the only form of non-return protection. Install an additional check valve to reduce water hammer shocks to the pump.

6. Know the total depth of the bore and ensure that the pump does not rest on the bottom or in sand. Ensure 1.5 metres clear below the pump to the bottom of the bore.

7. Know the pumping level of the bore and ensure that the pump remains submerged at all times.

8. A Flow Inducer Sleeve or shroud which ensures that the water is drawn into the pump from below the motor is required when the pump is

- in open water (i.e. water tank, river or dam),
- in a rock well,
- below casing or set in screens,
- The well diameter is sizeable.

9. Never install borehole submersibles in a crooked bore without gauging first. Lower a gauge which is the same diameter and length as the pump to be used into the bore. If the gauge does not bind, it is safe to install the pump.

10. Never support the weight of the pump by the power cable or by the safety rope.

An un-strained safety rope must be connected to all pumps suspended on polythene or flexible pipe. This line should be fastened to the lifting hook of the pump. The other end should be fastened at the top of the bore casing or bore cap. The safety rope should be affixed at three metre intervals by a suitable underwater tape with the rope having some slackness between each interval to compensate for the expansion of the pipe when under load.

If metal drop pipe is used, it is best installed in three-meter lengths to enable easy handling. All threads should be treated against corrosion.

11. Install a lightning arrestor installed as close to the wellhead in accordance with manufacturers recommendations. A lightning arrestor provides protection against induced voltage surges on secondary power lines; it is not effective against direct hits.

12. Use an ohmmeter to make continuity and insulation checks before installing the pump in the bore.

13. Place the additional motor label with the pump label and place both inside the iPROTECT for future reference.

CHECKING MOTOR ROTATION

Before lowering the pump into the bore check the pump rotation, continuity and insulation. Before operating the pump, first pour clean water into discharge by holding the non-return valve open so that the shaft bearings and the impellers become wet.

The motor shaft rotates anticlockwise viewed from the lead grommet end.

20. Initial Starting Procedure

Before connecting the discharge pipe from the bore, the bend and gate valve should be screwed into the top of the bore cap as a pump valve.

With the gate valve just **slightly** open, start the pump to fill the drop pipe

NEVER START THE PUMP AT FULL FLOW FOR THE FIRST TIME

Immediately the pump has been started, catch some of the discharge water in a large container and allow the solids to settle out. If little or no sand appears, open the gate valve to 1/3 and pump until the water is clean.

For the first 10 to 20 minutes of operation, it is suggested to keep the gate valve only partially open, to maintain a low flow which will prevent turbulence in the well near the pump and possible seizing of the pump due to excessive sand in the water.

If excessive amounts of sand or other solids are being pumped, shut the pump down, and have the bore attended to before restarting the pump.

Pumping of sand of even very fine small quantities will shorten the effective life of any pump.

NEVER OPEN THE GATE VALVE ABRUPTLY as this may raise sand and deposits.

The pump should be run for a period of 30 minutes to check that it does not pump the bore dry. This would be obvious by large fluctuations on the pressure gauge and current draw displayed on the controller as the pump flow surges.

Continuing operation with a pump that is surging could cause serious damage to the pump and motor due to shock pressures as the pump alternately takes up and loses the hydraulic load. This effect is generally referred to as “snoring”.

WELL TEST

Check the pump and well performance before making the final connection to the discharge system.

1. Install a gate valve on the end of the pipe. Partially open the valve.

2. Start the pump.

3. Open valve gradually to give full flow.

4. If the discharge is not clear, let the pump run until water clears. If water does not clear in 30 minutes, stop the pump and take the necessary steps to correct the condition. After the water has appeared clear, check for sand by discharging into a clean bucket or suitable container.

5. Close valve until maximum required system flow rate is obtained (this should correspond to the cut- in pressure of the pressure switch). Ensure that the output of the pump at this setting is not greater than the yield of the well. This can be checked by monitoring the well drawdown level and ensuring that the level is stable at the maximum required system flow rate.

If in doubt about the draw-down level of the bore, the use of level control by capacitance probes is recommended. The probe should be situated to switch the pump off when the bore water level drops within 1 metre of the pump suction.

Relying solely on a high-level probe to automatically turn the pump on is not ideal, as rapid cycling of the pump could occur causing severe damage to the unit.

Using the Run time / Stop time parameters in the NXT IPROTECT controller is an excellent solution.

PRESSURE SYSTEM INSTALLATION

When a submersible pump is to be used as a pressure system, it is critical to include a suitably sized pressure tank to prevent excessive pump starts.

Set the pressure tank pre-charge to 2/3 of maximum system (gauge) pressure

CAUTION: If the available pump pressure at the bore head can exceed the pressure tank's maximum working pressure should there be a pressure switch failure, then a pressure relief valve should be fitted in the delivery line to prevent the tank being over pressurised. Use only nominal 30 litre draw off tanks or larger.

Do not at any time use smaller tanks. If cut out pressures exceed 5 bar (500 kPa, 73 psi) fit a 12 bar switch. Pressure switches operated outside their design working range can fatigue and cause pump and fittings failures and void warranty

21. Accessories

Image	Description	Part #
	Capacitance Probe	805321
	SK12(5M) H05 10 amp SK12(10M) H05 10 amp SK12(20M) H05 10 amp SK12(30M) H05 10 amp FSK1 (5m) H07 10 amp FSK1 (10m) H07 16 amp FSK1-20 (20m) H07 16 amp	700965 700962 700963 700964 809941 700610 700611
	BIA LOW LEVEL FLOAT SWITCH (NC) with 30m cable Down (no water) = closed circuit	808728
	Float switch counter-weight	700967
	Pressure switch (NC) 6 bar Pressure switch (NC) 12 bar Reverse acting pressure switch (NO) 5.5 bar Reverse acting pressure switch (NO) 10 bar	701440 701380 809863 809864

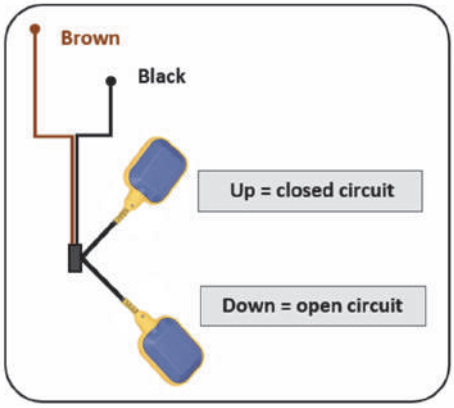

3 wire' floats allow for NO or NC wiring.

Connecting to the controller using the black and brown wires the circuit is closed when the float is up, open circuit when the float is down

22. Trouble Shooting Guide

Symptom	Possible causes
Overload protection trips	Hydraulic overload Low voltage supply to motor Excessive motor starts Water logged pressure tank
No water delivered	Broken pump shaft or coupling Check valve installed backwards or check valve stuck closed Inlet screen clogged Water level too low in well Hole in delivery pipe below top of bore
Low water delivery	Fittings preventing check valve opening fully Pump rotation backwards Water level too low in well Discharge pipe clogged, corroded or ruptured Inlet screen partially clogged Worn pump Leak in outlet pipe below top of bore Check valve stuck partially closed
Pump doesn't shut off	Pipe ruptured Defective or improperly adjusted pressure switch Water level too deep for pump. Check selection Pump is air or gas bound Worn pump Pipe obstruction
Pump starts and stops too often (i.e. more than 5 per hour)	Faulty pressure switch, Pressure switch differential adjustment failure Pressure tank is too small or tank has lost pressure
Electric shock from water pipe Note: A motor down to earth or defective cable will not cause a shock.	Defective (grounded) incoming power leads Earth wire connections incorrect
Pressure gauge oscillates, flow surges (snoring)	Water level too low in the well. (Flow through pump greater than flow into well)
Electrolysis on motor and/or pump	Insufficient earthing / earth leakage Broken earth wire

23. Warranties – Terms and Conditions

This warranty is given in addition to the consumer guarantees found within the Australian Competition and Consumer Act 2010 (Cth) for goods purchased in Australia and the Consumer Guarantees Act 1993 NZ for goods purchased in New Zealand:

1) White International Pty Ltd / White International NZ Ltd (White International) warrant that all products distributed are free from defects in workmanship and materials, for their provided warranty period as indicated on the top or opposite side of this document. Subject to the conditions of the warranty, White International will repair any defective products free of charge at the premises of our authorised service agents throughout Australia and New Zealand if a defect in the product appears during the warranty period. If you believe that you have purchased a defective product and wish to make a claim under this warranty, contact us on our Sales Hotline on 1300 783 601, or send your claim to our postal address or fax line below and we will advise you as to how next to proceed. You will be required to supply a copy of your proof of purchase to make a claim under this warranty.

2) This warranty excludes transportation costs to and from White International or its appointed service agents and excludes defects due to non-compliance with installation instructions, neglect or misuse, inadequate protection against the elements, low voltage or use or operation for purposes other than those for which they were designed. For further information regarding the suitability of your intended application contact us on our Sales Hotline on 1300 783 601. If you make an invalid claim under this warranty, the original product will be sent back to you unrepaired.

3) This warranty refers only to products sold after the 1st January 2012, and is not transferable to another product type and only applies to the original owner, purchaser or end user, and is in addition to the consumer guarantees found within the Competition and Consumer Act 2010 (Cth) for goods purchased in Australia and the Consumer Guarantees Act 1993 (NZ) for goods purchased in New Zealand.

4) Our goods come with guarantees that cannot be excluded under the Australian Consumer Law. You are entitled to a replacement or refund for a major failure and for compensation for any other reasonably foreseeable loss or damage. You are also entitled to have the goods repaired or replaced if the goods fail to be of acceptable quality and the failure does not amount to a major failure.

5) To the fullest extent permitted by law, White International excludes its liability for all other conditions or warranties which would or might otherwise be implied at law. To the fullest extent permitted by law, White International's liability under this warranty and any other conditions, guarantees or warranties at law that cannot be excluded, including those in the Competition and Consumer Act 2010 (Cth), is expressly limited to: (a) in the case of products, the replacement of the product or the supply of equivalent product, the payment of the cost of replacing the product or of acquiring an equivalent product or the repair of the product or payment of the cost of having the product repaired, is at the discretion of White International or a 3rd party tribunal elected under the Competition and Consumer Act 2010 (Cth) for goods purchased in Australia and the Consumer Guarantees Act 1993 (NZ) for goods purchased in New Zealand; and

6) To the fullest extent permitted by law, this warranty supersedes all other warranties attached to the product or its packaging.

7) In the case of services, supplying the services again or the payment of the cost of having the services supplied again, is at the discretion of White International or a 3rd party tribunal elected under the Competition and Consumer Act 2010 (Cth) for goods purchased in Australia and the Consumer Guarantees Act 1993 (NZ) for goods purchased in New Zealand.

8) Our warranty commences from the date of purchase of the above-mentioned products. Proof of purchase is required before consideration under warranty is given.

Print a copy of this page and record your date of purchase in the space below.
Retain the printed copy along with your purchase receipt for your records.

Date of Purchase ..... **Model Purchased** .....

Distributed By:
WHITE®
INTERNATIONAL

www.whiteint.com.au
www.whiteint.co.nz

Please always refer to our website for further technical information & new product innovations

Disclaimer: Every effort has been made to publish the correct information in this manual.
No responsibility will be taken for errors, omissions or changes in product specifications.

© 2026 Copyright White International Pty Ltd

TM ® - WARNING: Please be aware that various brands & products depicted within this document are subject to trademark, patent or design registrations. Infringement of any intellectual property contained within this document without express written authority by the appropriate intellectual property holder may result in further legal action to be taken. For any queries regarding use of the contained information please feel free to contact White International Pty Ltd.